PRETREATMENT PROGRAM

A Resource Guide for Commercial Construction

3/23/17

Building Structure Elevator Pit Drain and Sump Pump Discharge Requirements

Discharge Requirements for Elevator Pit Drain and Sump Pump

On December 7, 2010 the State of Idaho, Division of Building Safety issued a Policy statement that the sump pump (or drain) required in elevator pits by ASME A17.1 Section 2.2.2.5 will now be considered **optional** rather than mandatory. In the case of hydraulic elevators, if a sump pump is installed, the City of Meridian requires the drain and pump combination be connected to an oil/water separator prior to discharge to the City's sanitary sewer system. It is recommended a professional engineering analysis of the elevator's liquid hydraulic and fire suppression evacuation requirements be conducted, in order to specify an adequately-sized sump pump and interceptor system to retain and prevent oils from entertaining the sanitary sewer system.

The City of Meridian regulates Industrial and Commercial wastewater discharges into the public sewer system through it Industrial Pretreatment program. The Clean Water Act and the General Pretreatment Regulations (40 CFR Part 403) are the basis of this federal requirement. The local authority for the City of Meridian Pretreatment Program is established by Title 9 Chapter 2 of the Meridian City Code.

Where an Elevator drain and sump pump installation is required by State Code, the combination will be connected to an oil/water separator prior to discharge to the City of Meridian Sewer System. A professional engineering analysis of the elevator's liquid hydraulic and fire suppression evacuation requirements is necessary in order to specify an adequately-sized sump pump and interceptor system to retain and prevent oils from entertaining the sewer system. An engineer's specification will be specific to the current elevator system to meet fire code and Idaho Elevator Code. The City plumbing inspector must approve the final design of the oil/water/sump pump discharge system. Priority pollutants of concern are hydraulic fluids and service bay oils.

Technical assistance sheets are attached that have been acceptable to the City of Meridian for multiple-level elevator building projects in the past.

NOTE: This information is for guidance purposes only. Contact the State of Idaho, Division of Building Safety for specific elevator code requirements at:

State of Idaho
Meridian Office
1090 East Watertower St., Suite 120
Meridian, Id. 83642
Office Phone (208) 332-8974

HYDROMATIC®

SD50, SW50 & VS50

1/2 HP Submersible Sump/Effluent Pump

Applications

- Basement Sumps
- Septic Tank Effluent
- Industrial Circulators
- Transfer Tanks

VS50

SW50

SD50

Improved Diaphragm Switch

Pentair
Pump Group

SW/SD/VS50 - 1/2 HP Submersible Sump/Effluent Pump

DETAILS

Pump Characteristics

Pump/Motor Unit	Submersible
Automatic Models	SW50, SD50, or VS50
Horsepower	1/2
Full Load Amps	12.6
Motor Type	Shaded Pole (4 Pole)
R.P.M.	1550
Phase	1Ø
Voltage	115
Hertz	60
Temperature	120° F Max. Fluid Temp.
NEMA Design	A
Insulation	Class B
Discharge Size	1-1/2" NPT
Solids Handling	3/4"
Weight	28 lbs.
Power Cord	18/3, SJTW, 10' or 20' std

Performance Data

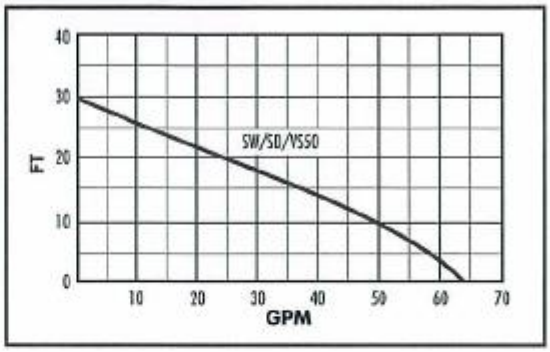

Materials of Construction

Handle	Stainless Steel
Lubricating Oil	Dielectric Oil
Motor Housing	Cast Iron
Pump Casing	Cast Iron
Shaft	Steel
Mechanical Shaft Seal	Seal Faces: Carbon/Ceramic Seal Body: Anodized Steel Spring: Stainless Steel Bellows: Buna-N
Impeller	Engineered Thermoplastic
Upper Bearing	Bronze Sleeve Bearing
Lower Bearing	Single Row Ball Bearing
Bottom Plate	Polyester Coated Steel
Fasteners	Stainless Steel
Strainer Base	Engineered Thermoplastic

Dimensional Data

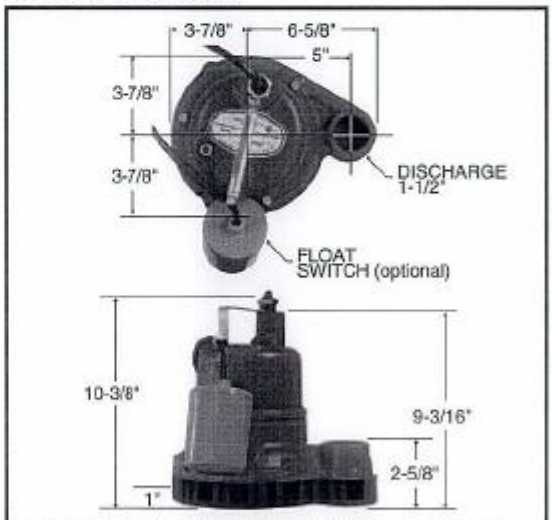

All dimensions in inches. Metric for international use. Component dimensions may vary ± 1/8 inch. Dimensional data not for construction purpose unless certified. Dimensions and weights are approximate. On/Off level adjustable. We reserve the right to make revisions to our product and their specifications without notice.

HYDROMATIC®
Pentair Pump Group

SSPMA Certified Pump

– Your Authorized Local Distributor –

USA
1840 Barney Road Ashland, Ohio 44805
Tel: 419-289-3042 Fax: 419-281-4087

www.hydromatic.com

CANADA
269 Trillium Drive Kitchener, Ontario, Canada N2G 4W5
Tel: 519-896-2163 Fax: 519-896-6337

© 2004 Hydromatic® Ashland, Ohio. All Rights Reserved.

Item #: W-02-7130 3M 4/04

SMITH® JAY R. SMITH MFG. CO.®
DIVISION OF SMITH INDUSTRIES, INC.
POST OFFICE BOX 2397
MONTGOMERY, ALABAMA 36109-0397 (USA)
TEL: 334-277-9520 FAX: 334-272-7398 www.jrsmith.com

MEMBER OF:

LOCATION

OIL INTERCEPTOR WITH INTEGRAL STORAGE COMPARTMENT

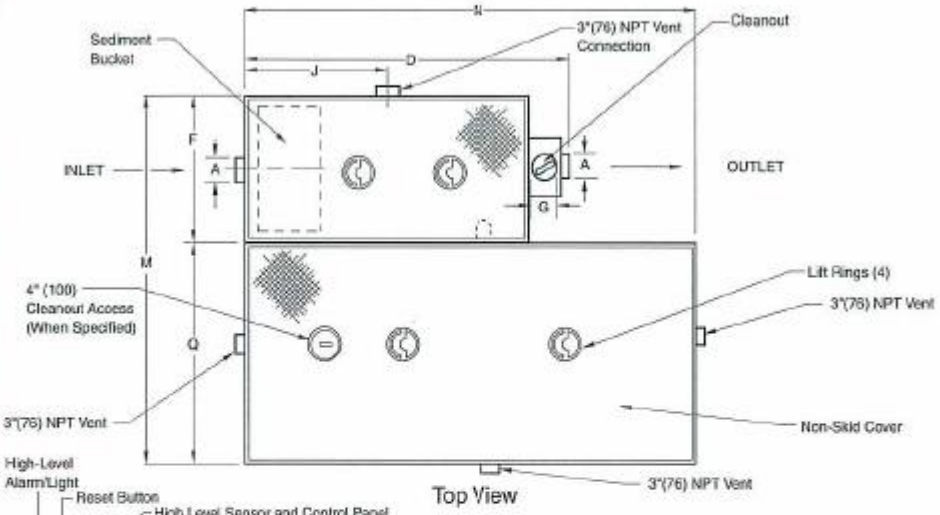

Top View

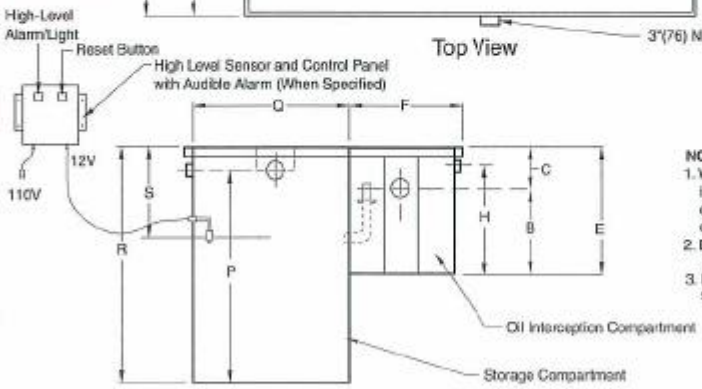

End View

NOTES:
1. When double wall containment is specified the overall dimensions change, consult the factory for the double wall containment dimensions.
2. Dimensions shown in parentheses are in millimeters.
3. Interceptor shall be vented on outlet side per local code requirements.

REGULARLY FURNISHED:
Fabricated Steel with Diamond Plate Cover, Duco Coated Inside and Coal Tar Outside, Complete with Flow Control Fitting.

VARIATIONS:
- [ ] Traffic Rated Cover-H20
- [ ] Double Wall Containment - DWC (Note 1)
- [ ] 4" (100) Cleanout Access
- [ ] High Level Sensor and Control Panel - CBS

OPTIONAL MATERIALS:
- [ ] Coal Tar Inside

REFER TO BACK OF SHEET FOR CAPACITIES AND DIMENSIONS

REV.	DATE	DESCRIPTION	BY	CKD. BY
O	3-28-07	Revised Regularly Furnished	JJ	TWK
N	5-8-05	Revised Notes	RN	CL
M	2-3-06	Revised Optional Materials	RN	CL
L	3-10-05	Revised Variations & Dwg.	RN	CL

WEIGHT POUNDS | VOLUME RN CUBIC FEET | FIGURE NUMBER 8599 Series

FIGURE NUMBER: 8599 Series | DRAWN BY: TBW | CHECKED BY: TD | APPROVED BY: TD | DATE: 8-10-99 | SCALE: NONE | SIZE: A | DRAWING NUMBER: 8599 Series | O

DIMENSIONS ARE SUBJECT TO MANUFACTURERS TOLERANCE AND CHANGE WITHOUT NOTICE

WE CAN ASSUME NO RESPONSIBILITY FOR USE OF SUPERSEDED OR VOID DATA

FIGURE NUMBER	8599 SERIES BS	DRAWN BY: EMB	CHECKED BY: BW	APPROVED BY: McD	DATE: 3-5-91	SCALE: NONE	SIZE A	DRAWING NUMBER S8599BS	C

DIMENSIONS ARE SUBJECT TO MANUFACTURERS TOLERANCE AND CHANGE WITHOUT NOTICE

WE CAN ASSUME NO RESPONSIBILITY FOR USE OF SUPERSEDED OR VOID DATA

CAPACITIES AND DIMENSIONS

MODEL NUMBER	OIL INTERCEPTOR COMPARTMENT										STORAGE TANK COMPARTMENT						
	GPM	A*	B	C	D	E	F	G	H	J	Gals. Capacity	M	N	P	Q	R	S
•8599-10-5	10	02 (50)	9 1/2 (240)	3 3/4 (95)	21 1/4 (540)	13 1/4 (335)	13 (330)	2 (51)	9 3/4 (250)	9 1/2 (240)	5	24 (610)	21 1/4 (540)	10 1/4 (260)	11 (279)	13 1/4 (335)	9 1/4 (235)
8599-10-50	10	02 (50)	9 1/2 (240)	3 3/4 (95)	21 1/4 (540)	13 1/4 (335)	13 (330)	2 (51)	9 3/4 (250)	9 1/2 (240)	50	25 (635)	30 (760)	50 3/4 (1290)	12 (305)	55 (1397)	9 1/4 (235)
8599-15-50	15	02 (50)	12 (305)	3 1/2 (89)	25 (635)	15 1/2 (395)	14 (355)	2 (51)	12 (305)	10 1/4 (260)	50	26 (660)	30 (760)	50 3/4 (1290)	12 (305)	55 (1397)	9 3/4 (250)
8599-20-50	20	03 (80)	13 (330)	4 (100)	28 1/2 (725)	17 (430)	15 3/4 (400)	2 (51)	13 1/2 (345)	12 (305)	50	27 3/4 (705)	30 (760)	50 3/4 (1290)	12 (305)	55 (1397)	12 1/2 (320)
8599-25-100	25	03 (80)	15 1/4 (390)	4 1/2 (115)	30 (760)	19 3/4 (500)	16 3/4 (425)	2 (51)	16 1/4 (415)	12 3/4 (325)	100	31 3/4 (805)	50 3/4 (1290)	56 3/4 (1441)	15 (380)	61 (1550)	13 1/2 (345)
8599-35-100	35	03 (80)	16 (405)	5 (125)	32 1/2 (825)	21 (535)	18 1/4 (465)	2 (51)	17 1/2 (445)	14 1/2 (370)	100	33 1/4 (845)	50 3/4 (1290)	56 3/4 (1441)	15 (380)	61 (1550)	14 (355)
8599-50-100	50	03 (80)	17 1/2 (445)	6 3/4 (170)	35 1/2 (900)	24 1/4 (615)	20 3/4 (525)	2 (51)	20 3/4 (525)	16 (405)	100	35 1/4 (895)	50 3/4 (1290)	56 3/4 (1441)	15 (380)	61 (1550)	16 3/4 (425)
8599-75-100	75	04 (100)	21 1/2 (545)	15 1/2 (395)	50 3/4 (1290)	37 (940)	30 1/2 (775)	3 (76)	32 3/4 (830)	21 (535)	100	45 1/2 (1155)	50 3/4 (1290)	56 3/4 (1441)	15 (380)	61 (1550)	24 (610)
8599-100-250	100	04 (100)	27 (685)	16 1/2 (420)	54 3/4 (1390)	43 1/2 (1105)	33 1/2 (850)	3 (76)	39 1/4 (995)	23 (585)	250	58 1/2 (1485)	60 3/4 (1543)	60 3/4 (1543)	25 (635)	65 (1650)	25 (635)
8599-150-250	150	05 (125)	33 (840)	17 1/2 (445)	60 3/4 (1543)	50 1/2 (1283)	38 1/2 (980)	4 (100)	46 1/4 (1175)	25 1/2 (650)	250	63 1/2 (1613)	60 3/4 (1543)	60 3/4 (1543)	25 (635)	65 (1650)	27 (685)
8599-200-250	200	05 (125)	37 (940)	17 1/2 (445)	67 3/4 (1720)	54 1/2 (1385)	43 1/2 (1105)	4 (100)	50 1/4 (1275)	29 (735)	250	68 1/2 (1740)	60 3/4 (1543)	60 3/4 (1543)	25 (635)	65 (1650)	27 (685)
8599-250-500	250	05 (125)	40 (1015)	18 (455)	73 3/4 (1875)	58 (1473)	47 1/2 (1205)	4 (100)	53 3/4 (1365)	32 (815)	500	79 1/2 (2019)	90 3/4 (2305)	71 3/4 (1822)	32 (815)	76 (1930)	27 1/2 (700)
8599-300-500	300	05 (125)	43 1/2 (1105)	18 (455)	85 3/4 (2178)	61 1/2 (1562)	54 1/2 (1385)	4 (100)	57 1/4 (1454)	38 (965)	500	86 1/2 (2197)	90 3/4 (2305)	71 3/4 (1822)	32 (815)	76 (1930)	27 1/2 (700)
8599-350-500	350	05 (125)	43 1/2 (1105)	18 (455)	85 3/4 (2178)	61 1/2 (1562)	54 1/2 (1385)	4 (100)	57 1/4 (1454)	38 (965)	500	86 1/2 (2197)	90 3/4 (2305)	71 3/4 (1822)	32 (815)	76 (1930)	27 1/2 (700)
8599-400-500	400	06 (150)	43 1/2 (1105)	18 (455)	85 3/4 (2178)	61 1/2 (1562)	54 1/2 (1385)	4 (100)	57 1/4 (1454)	38 (965)	500	86 1/2 (2197)	90 3/4 (2305)	71 3/4 (1822)	32 (815)	76 (1930)	27 1/2 (700)
8599-450-500	450	06 (150)	48 (1220)	18 (455)	103 1/4 (2635)	66 (1675)	64 1/2 (1640)	5 (125)	61 3/4 (1570)	46 (1170)	500	96 1/2 (2438)	90 3/4 (2305)	71 3/4 (1822)	32 (815)	76 (1930)	28 (710)
8599-500-750	500	06 (150)	48 (1220)	18 (455)	103 1/4 (2635)	66 (1675)	64 1/2 (1640)	5 (125)	61 3/4 (1570)	46 (1170)	750	99 1/2 (2438)	103 1/4 (2635)	83 3/4 (2127)	35 (890)	88 (2235)	28 (710)

* Larger Inlet and Outlet Size Available Specify Required Size.

NOTE: Model number is defined as: 8599-10-50
- Series number
- GPM flow rate for oil interceptor.
- Size of storage tank compartment in gallons.

• Recommended for Elevator Pits.

NOTE: Dimensions shown in parentheses are in millimeters.

REV.	DATE	DESCRIPTION	BY	CKD BY
A	05/25/07	Added 8599-10-5 to chart	JJ	JN
B	3-5-04	Revised Chart	RN	CL
C	10-31-98	Added Millimeters	EMB	BS

WEIGHT POUNDS

VOLUME CUBIC FEET

FIGURE NUMBER 8599 SERIES BS

SMITH® JAY R. SMITH MFG. CO.® DIVISION OF SMITH INDUSTRIES, INC. POST OFFICE BOX 4807 MONTGOMERY, ALABAMA 36103-4807 (USA) TEL: 334-272-8250 FAX: 334-272-7264 www.jrsmith.com

CUSTOMER DRAWN

MEMBER OF:

LOCATION